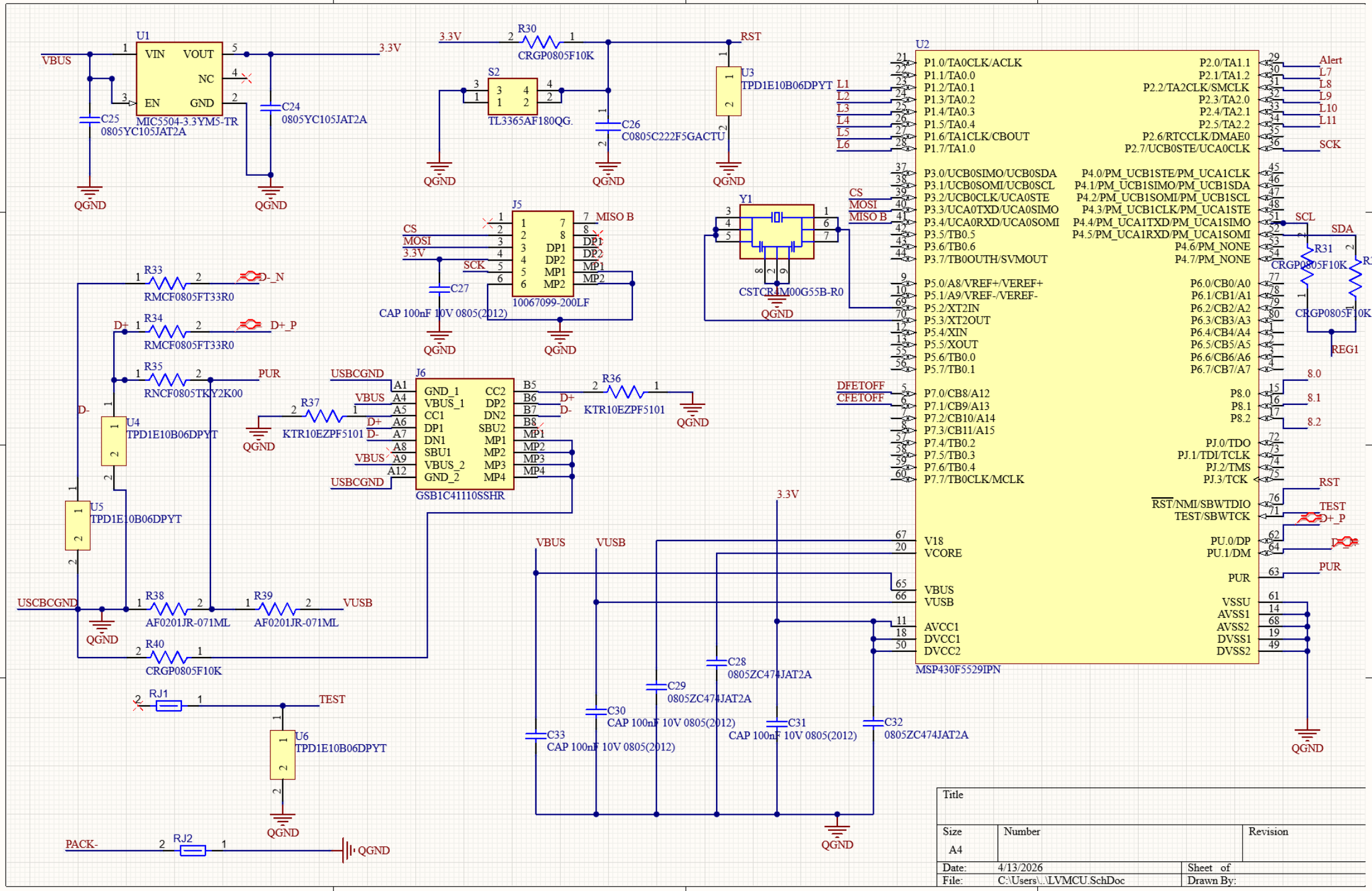
U1
VIN
VOUT
NC
EN
GND
MIC5504-3.3YM5-TR
VBUS
3.3V
C25
0805YC105JAT2A
C24
0805YC105JAT2A
QGND
R30
CRGP0805F10K
S2
TL3365AF180QG.
C26
C0805C222F5GACTU
RST
U3
TPD1E10B06DPYT
U2
MSP430F5529IPN
P1.0/TA0CLK/ACLK
P1.1/TA0.0
P1.2/TA0.1
P1.3/TA0.2
P1.4/TA0.3
P1.5/TA0.4
P1.6/TA1CLK/CBOUT
P1.7/TA1.0
P2.0/TA1.1
P2.1/TA1.2
P2.2/TA2CLK/SMCLK
P2.3/TA2.0
P2.4/TA2.1
P2.5/TA2.2
P2.6/RTCCLK/DMAE0
P2.7/UCB0STE/UCA0CLK
P3.0/UCB0SIMO/UCB0SDA
P3.1/UCB0SOMI/UCB0SCL
P3.2/UCB0CLK/UCA0STE
P3.3/UCA0TXD/UCA0SIMO
P3.4/UCA0RXD/UCA0SOMI
P3.5/TB0.5
P3.6/TB0.6
P3.7/TB0OUTH/SVMOUT
P4.0/PM_UCB1STE/PM_UCA1CLK
P4.1/PM_UCB1SIMO/PM_UCB1SDA
P4.2/PM_UCB1SOMI/PM_UCB1SCL
P4.3/PM_UCB1CLK/PM_UCA1STE
P4.4/PM_UCA1TXD/PM_UCA1SIMO
P4.5/PM_UCA1RXD/PM_UCA1SOMI
P4.6/PM_NONE
P4.7/PM_NONE
P5.0/A8/VREF+/VEREF+
P5.1/A9/VREF-/VEREF-
P5.2/XT2IN
P5.3/XT2OUT
P5.4/XIN
P5.5/XOUT
P5.6/TB0.0
P5.7/TB0.1
P6.0/CB0/A0
P6.1/CB1/A1
P6.2/CB2/A2
P6.3/CB3/A3
P6.4/CB4/A4
P6.5/CB5/A5
P6.6/CB6/A6
P6.7/CB7/A7
P7.0/CB8/A12
P7.1/CB9/A13
P7.2/CB10/A14
P7.3/CB11/A15
P7.4/TB0.2
P7.5/TB0.3
P7.6/TB0.4
P7.7/TB0CLK/MCLK
P8.0
P8.1
P8.2
PJ.0/TDO
PJ.1/TDI/TCLK
PJ.2/TMS
PJ.3/TCK
RST/NMI/SBWTDIO
TEST/SBWTCK
PU.0/DP
PU.1/DM
PUR
V18
VCORE
VBUS
VUSB
AVCC1
DVCC1
DVCC2
VSSU
AVSS1
AVSS2
DVSS1
DVSS2
Alert
L7
L8
L9
L10
L11
SCK
SCL
SDA
REG1
DFETOFF
CFETOFF
CS
MOSI
MISO B
J5
10067099-200LF
C27
CAP 100nF 10V 0805(2012)
Y1
CSTCR4M00G55B-R0
R31
R32
CRGP0805F10K
R33
RMCF0805FT33R0
D-_N
R34
D+_P
R35
RNCF0805TKY2K00
PUR
U4
TPD1E10B06DPYT
U5
TPD1E10B06DPYT
J6
GSB1C41110SSHR
USBCGND
VBUS
D+
D-
R36
KTR10EZPF5101
R37
KTR10EZPF5101
R38
AF0201JR-071ML
R39
AF0201JR-071ML
VUSB
R40
CRGP0805F10K
RJ1
TEST
U6
TPD1E10B06DPYT
PACK-
RJ2
C28
0805ZC474JAT2A
C29
0805ZC474JAT2A
C30
CAP 100nF 10V 0805(2012)
C31
CAP 100nF 10V 0805(2012)
C32
0805ZC474JAT2A
C33
CAP 100nF 10V 0805(2012)
Title
Size
A4
Number
Revision
Date: 4/13/2026
Sheet of
File: C:\Users\..\LVMCU.SchDoc
Drawn By:

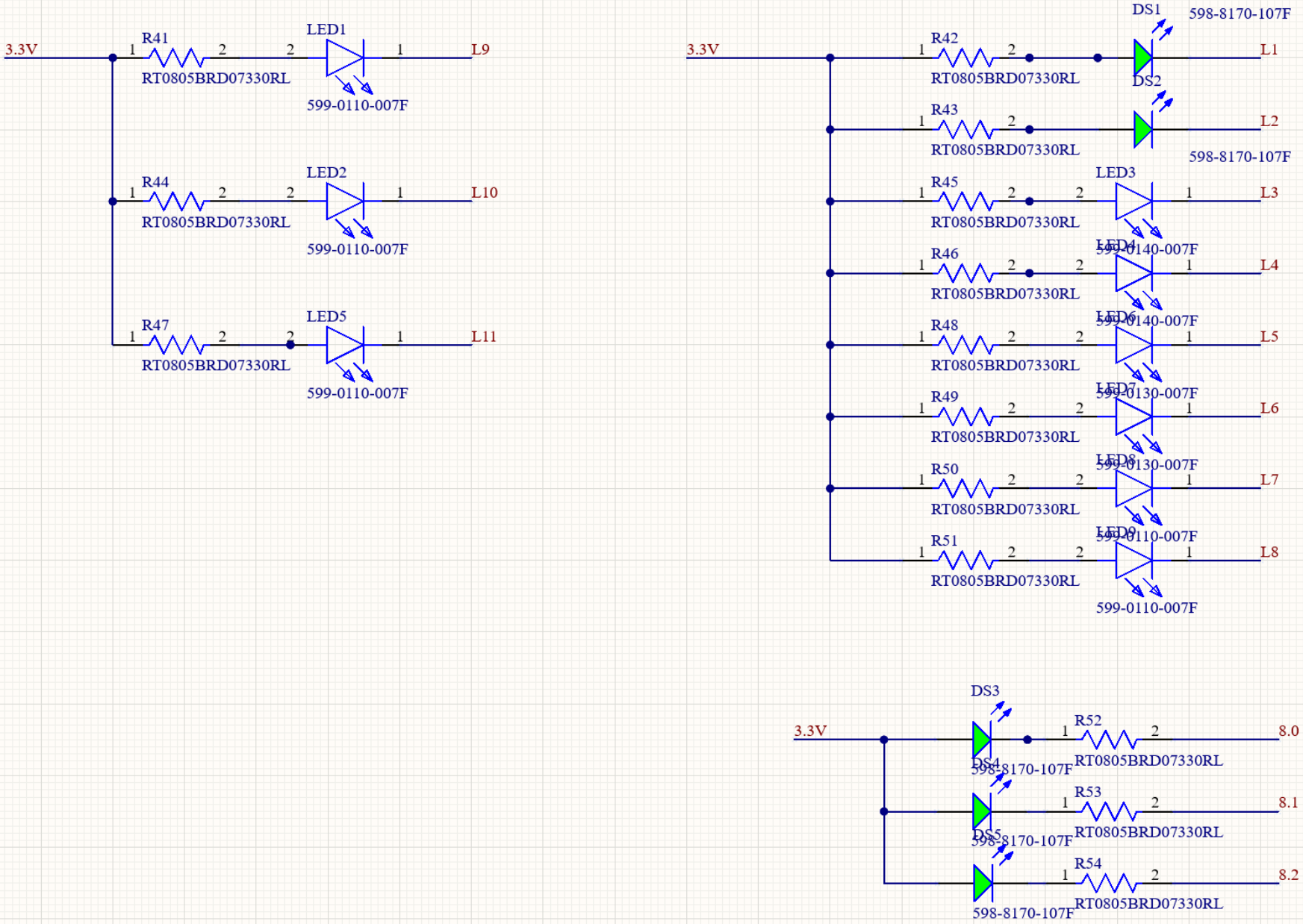
3.3V
R41
RT0805BRD07330RL
LED1
599-0110-007F
L9
R44
RT0805BRD07330RL
LED2
599-0110-007F
L10
R47
RT0805BRD07330RL
LED5
599-0110-007F
L11
3.3V
R42
RT0805BRD07330RL
DS1
598-8170-107F
L1
R43
RT0805BRD07330RL
DS2
598-8170-107F
L2
R45
RT0805BRD07330RL
LED3
599-0140-007F
L3
R46
RT0805BRD07330RL
LED4
599-0140-007F
L4
R48
RT0805BRD07330RL
LED6
599-0130-007F
L5
R49
RT0805BRD07330RL
LED7
599-0130-007F
L6
R50
RT0805BRD07330RL
LED8
599-0110-007F
L7
R51
RT0805BRD07330RL
LED9
599-0110-007F
L8
3.3V
DS3
598-8170-107F
R52
RT0805BRD07330RL
8.0
DS4
598-8170-107F
R53
RT0805BRD07330RL
8.1
DS5
598-8170-107F
R54
RT0805BRD07330RL
8.2